SILICON RECTIFIERS

6 Ampere Silicon Power Diodes

FEATURES

- All Diffused Series
- Available In Normal & Reverse Polarity
- Industrial Grade
- Available In Avalanche Characteristic

DO-4

ELECTRICAL SPECIFICATIONS

		6PSM/PSMR
$I_{F(A)}$	Maximum average forward current Tc = 150ºC	6 A
V_{FM}	Maximum peak forward voltage drop @ rated 1F(AV)	1.3 V
I_{FSM}	Maximum peak one cycle (non-rep) surge current 10 m sec	150 A
I_{FRM}	Maximum peak repetitive surge current	30 A
I^2t	Maximum I²t rating (non-rep.) for 5 to 10 msec.	150 A²sec

6PSM/PSMR

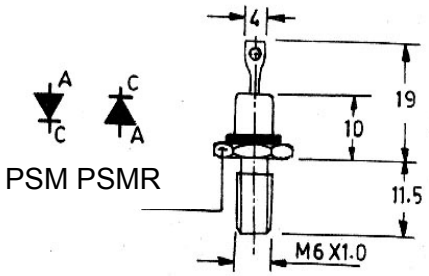

THERMAL MECHANICAL SPECIFICATIONS

Q_{J-C}	Maximum thermal resistance junction to case	3 °C/W
T_J	Operating junction Temp.	-65 °C to 150 °C
T_{stg}	Storage temperature	-65 °C to 200 °C
	Mounting torque (non-lubricated threads)	0.14 M-kg min. 0.17 M-kg max.
W	Approx. weight	7 g

ELECTRICAL RATINGS

TYPE	NUMBER 6PSM/PSMR	10	20	40	60	80	100	120	140	160
V_{RRM}	Max. repetitive peak reverse voltage (V)	100	200	400	600	800	1000	1200	1400	1600
$V_{R(RMS)}$	Max. R.M.S. reverse voltage (V)	70	140	280	420	560	700	840	980	1120
V_R	Max. D.C. blocking voltage (V)	100	200	400	600	800	1000	1200	1400	1600
	Recommended R.M.S. working voltage (V)	40	80	160	240	320	400	480	560	640
$I_{R(AV)}$	Max. average reverse leakage current @V_{RMM} Tc 25°C (µA)	100	100	100	100	100	100	100	100	100

SILICON RECTIFIERS

12 Ampere & 16 Ampere Silicon Power Diodes

FEATURES

- All Diffused Series
- Available In Normal & Reverse Polarity
- Industrial Grade
- Available In Avalanche Characteristic

DO-4

12 & 16 PSM/PSMR

ELECTRICAL SPECIFICATIONS

		12PSM/PSMR	16PSM/PSMR
$I_{F(A)}$	Maximum average forward Current Tc = 150ºC	12 A	16 A
V_{FM}	Maximum peak forward voltage drop @ rated 1F (AV)	1.3 V	1.2 V
I_{FSM}	Maximum peak one cycle (non-rep) surge current 10 msec	250 A	300 A
I_{FRM}	Maximum peak one cycle (non-rep) surge current 10 msec	60 A	80 A
I^2t	Maximum I²t rating (non-rep.) for 5 to 10 msec.	250 A²sec	450 A²sec

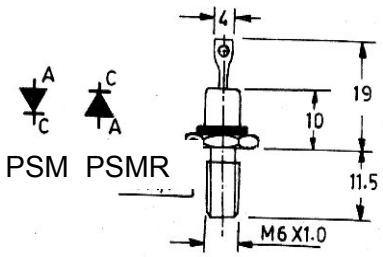

THERMAL MECHANICAL SPECIFICATIONS

Q_{J-C}	Maximum thermal resistance junction to case	2 °C/W 1 °C/W
T_J	Operating junction temp.	-65 °C to 150 °C
T_{stg}	Storage temperature.	-65 °C to 150 °C
	Mounting torque (Non-lubricated threads)	0.14 M-kg min. 0.17 M-kg max.
W	Approx. weight	7 g

ELECTRICAL RATINGS

TYPE	NUMBER 12PSM/PSMR 16PSM/PSMR	10	20	40	60	80	100	120	140	160
V_{RRM}	Max. repetitive peak voltage (V)	100	200	400	600	800	1000	1200	1400	1600
$V_{R(RMS)}$	Max.R.M.S reverse voltage (V)	70	140	280	420	560	700	840	980	1120
V_R	Max. D.C. blocking voltage (V)	100	200	400	60	800	1000	1200	1400	1600
	Recommended R.M.S. working voltage (V)	40	80	160	240	320	400	480	560	640
$I_{R(AV)}$	Max. average reverse leakage current @V_{RRM} Tc 25ºC µA	100	100	100	100	100	100	100	100	100

POWERSEM

SILICON RECTIFIERS

25 Ampere Silicon Power Diodes

FEATURES

- All Diffused Series
- Available In Normal & Reverse Polarity
- Industrial Grade
- Available In Avalanche Characteristic

DO-4

25PSM/PSMR

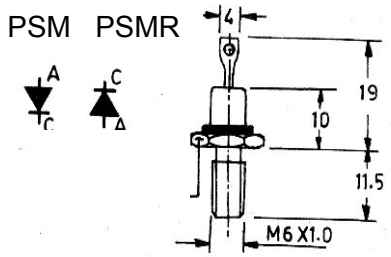

ELECTRICAL SPECIFICATIONS

		25PSM/PSMR
$I_{F(AV)}$	Maximum average forward current Tc = 140°C	25 A
V_{FM}	Maximum peak forward voltage drop @ rated 1F (AV)	1.35 V
I_{FSM}	Maximum peak one cycle (non-rep) surge current 10 msec	400 A
I_{FRM}	Maximum peak repetitive surge current	150 A
I^2t	Maximum I^2t rating (non-rep.) for 5 to 10 msec.	800 A^2sec

THERMAL MECHANICAL SPECIFICATIONS

O_{J-C}	Maximum thermal resistance junction to case	0.80 ºC/W
T_J	Operating junction temperature	-65 °C to 150 °C
T_{stg}	Storage temperature	-65 °C to 200 °C
	Mounting torque (Non-lubricated threads)	0.14 M-kg min. 0.17 M-kg max.
W	Approx. weight	7 g

ELECTRICAL RATING

TYPE	NUMBER 25PSM/PSMR	10	20	40	60	80	100	120	140	160
V_{RRMS}	Max. repetitive peak voltage (V)	100	200	400	600	800	1000	1200	1400	1600
$V_{R(RMS)}$	Max. R.M.S reverse voltage (V)	70	140	280	420	560	700	840	980	1120
V_R	Max. D.C. blocking voltage (V)	100	200	400	60	800	1000	1200	1400	1600
	Recommended R.M.S. working voltage (V)	40	80	160	240	320	400	480	560	640
$I_{R(AV)}$	Max. average reverse leakage current @V_{RRM} Tc 25 ° C (µA)	150	150	150	150	150	150	150	150	150

SILICON RECTIFIERS

40 Ampere Silicon Power Diodes

FEATURES

- All Diffused Series
- Available In Normal & Reverse Polarity
- Industrial Grade
- Available In Avalanche Characteristic

DO-5

40PSM/PSMR

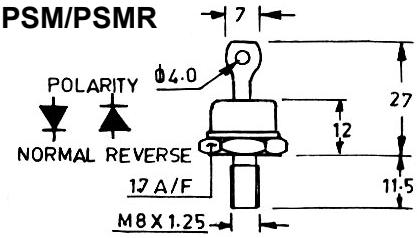

40PSM/PSMR

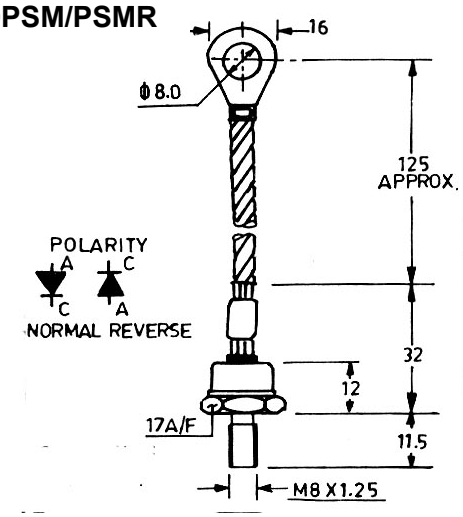

ELECTRICAL SPECIFICATIONS

$I_{F(AV)}$	Maximum average forward current Tc = 140°C	40 A
V_{FM}	Maximum peak forward voltage drop @ rated 1F(AV)	1.3 V
I_{FSM}	Maximum peak one cycle (non-rep) surge current 10 msec	500 A
I_{FRM}	Maximum peak repetitive surge current	200 A
I^2t	Maximum I²t rating (non-rep.) for 5 to 10 msec.	1200 A²sec

THERMAL MECHANICAL SPECIFICATIONS

O_{J-C}	Maximum thermal resistance junction to case	0.65 °C/W
T_J	Operating junction temperature	-65 °C to 150 °C
T_{stg}	Storage temperature	-65 °C to 200 °C
	Mounting torque (Non-lubricated threads)	0.4 M-kg min. 0.6 M-kg max.
W	Approx. weight	13.5 & 30 g

ELECTRICAL RATINGS

TYPE	NUMBER 40PSM/PSMR	10	20	40	60	80	100	120	140	160
V_{RRM}	Max. repetitive peak voltage (V)	100	200	400	600	800	1000	1200	1400	1600
$V_{R(RMS)}$	Max.R.M.S reverse voltage (V)	70	140	280	420	560	700	840	980	1120
V_R	Max. D.C. blocking voltage (V)	100	200	400	600	800	1000	1200	1400	1600
	Recommended R.M.S. working voltage (V)	40	80	160	240	320	400	480	560	640
$I_{R(AV)}$	Max. average reverse leakage current @V_{RRM} Tc 25°C (µA)	200	200	200	200	200	200	200	200	200

POWERSEM

SILICON RECTIFIERS

60 Ampere Silicon Power Diodes

FEATURES

- Diffused Series
- Available In Normal & Reverse Polarity
- Industrial Grade
- Available In Avalanche Characteristic

DO-5

60PSM/PSMR

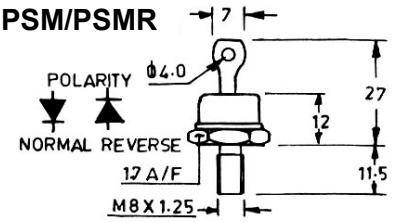

60PSM/PSMR

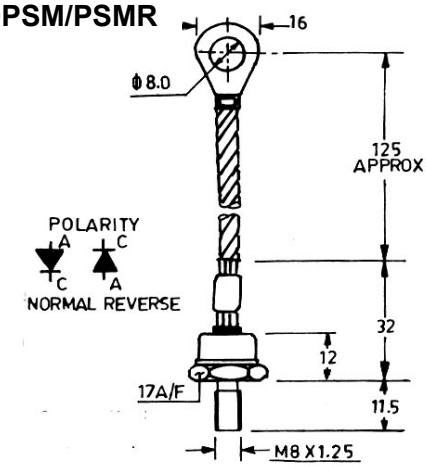

ELECTRICAL SPECIFICATIONS

$I_{F(AV)}$	Maximum average forward current Tc = 125°C	60 A
V_{FM}	Maximum peak forward voltage drop @ rated 1F(AV)	1.3 V
I_{FSM}	Maximum peak one cycle (non-rep) surge current 10 msec	860 A
I_{FRM}	Maximum peak cylce repetitive surge current	300 A
I^2t	Maximum I^2t rating (non-rep.) for 5 to 10 msec.	5000 A^2sec

THERMAL MECHANICAL SPECIFICATIONS

O_{J-C}	Maximum thermal resistance junction to case	0.55 °C/W
T_J	Operating junction temperature	-65 °C to 150 °C
T_{stg}	Storage temperature	-65 °C to 200 °C
	Mounting torque (Non-lubricated threads)	0.4 M-kg min. 0.6 M-kg max.
W	Approx. weight	13.5 & 30 g

ELECTRICAL RATINGS

TYPE	NUMBER 60PSM/PSMR	10	20	40	60	80	100	120	140	160
V_{RSM}	Max. non repetitive peak reverse voltage (V)	200	400	600	800	1000	1200	1400	1600	1800
V_{RRM}	Max. repetitive peak voltage (V)	100	200	400	600	800	1000	1200	1400	1600
V_R	Max. D.C. blocking voltage (V)	100	200	400	600	800	1000	1200	1400	1640
	Recommended R.M.S. working voltage (V)	40	80	160	240	320	400	480	560	640
$I_{R(AV)}$	Max. average reverse leakage current @ V_{RRM} Tc 25°C (μA)	200	200	200	200	200	200	200	200	200

POWERSEM

SILICON RECTIFIERS

70 Ampere Silicon Power Diodes

FEATURES

- All Diffused Series
- Available In Normal & Reverse Polarity
- Industrial Grade
- Available In Avalanche Characteristic

DO-5

70PSM/PSMR

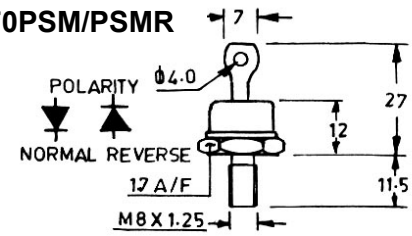

70PSM/PSMR

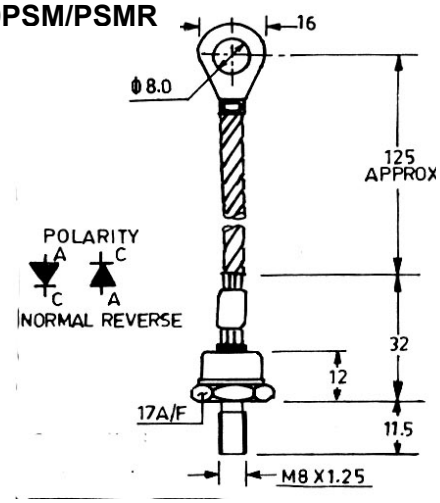

ELECTRICAL SPECIFICATIONS

$I_{F(AV)}$	Maximum average forward current Tc = 125°C	70 A
V_{FM}	Maximum peak forward voltage drop @ rated 1F(AV)	1.3 V
I_{FSM}	Maximum peak one cycle (non-rep) surge current 10 msec	1000 A
I_{FRM}	Maximum peak cylce repetitive surge current	350 A
I^2t	Maximum I²t rating (non-rep.) for 5 to 10 msec.	7500 A²sec

THERMAL MECHANICAL SPECIFICATIONS

O_{J-C}	Maximum thermal resistance junction to case	0.55 °C/W
T_J	Operating junction temperature	-65 °C to 150 °C
T_{stg}	Storage temperature	-65 °C to 200 °C
	Mounting torque (Non-lubricated threads)	0.4 M-kg min. 0.6 M-kg max.
W	Approx. weight	13.5 & 30 g

ELECTRICAL RATINGS

TYPE	NUMBER 70PSM/PSMR	10	20	40	60	80	100	120	140	160
V_{RRM}	Max. repetitive peak voltage (V)	100	200	400	600	800	1000	1200	1400	1600
$V_{R(RMS)}$	Max.R.M.S reverse voltage (V)	70	140	280	420	560	700	840	980	1120
V_R	Max. D.C. blocking voltage (V)	100	200	400	600	800	1000	1200	1400	1640
	Recommended R.M.S. working voltage (V)	40	80	160	240	320	400	480	560	640
$I_{R(AV)}$	Max. average reverse leakage current @ V_{RRM} Tc 25°C (µA)	200	200	200	200	200	200	200	200	200

POWERSEM

SILICON RECTIFIERS

100 Ampere Silicon Power Diodes

FEATURES

- Diffused Series
- Available In Normal & Reverse Polarity
- Industrial Grade
- Available In Avalanche Characteristic

DO-8

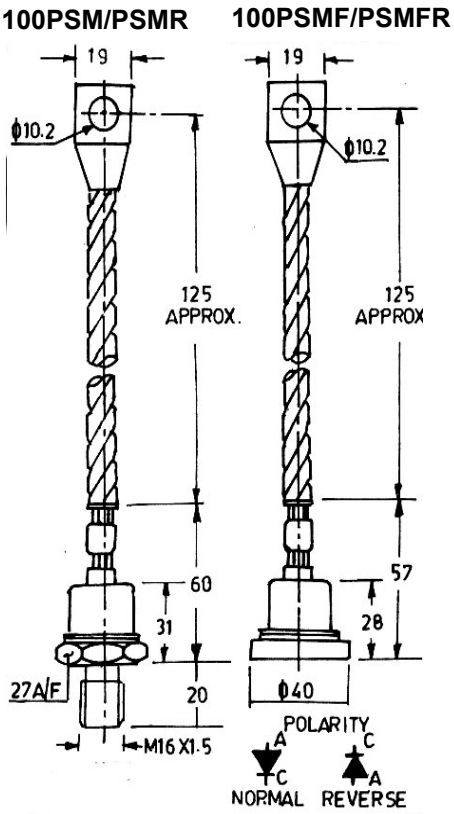

ELECTRICAL SPECIFICATIONS

$I_{F(AV)}$	Maximum average forward current Tc = 150ºC	100 A
V_{FM}	Maximum peak forward voltage drop @ rated 1F(AV)	1.4 V
I_{FSM}	Maximum peak one cycle (non-rep) surge current 10 msec	2300 A
I_{FRM}	Maximum peak cylce repetive surge current	500 A
I^2t	Maximum I^2t rating (non-rep.) for 5 to 10 msec.	26 000 A^2sec

THERMAL MECHANICAL SPECIFICATIONS

O_{J-C}	Maximum thermal resistance junction to case	0.40 °C/W
T_J	Operating junction temperature	-65 °C to 150 °C
T_{stg}	Storage temperature	-65 °C to 200 °C
	Mounting torque (Non-lubricated threads)	2.0 M-kg min. 3.0 M-kg max.
W	Approx. weight	150 g

ELECTRICAL RATINGS

TYPE	NUMBER 100PSM/PSMR 100PSMF/PSMFR	10	20	40	60	80	100	120	140	160
V_{RRM}	Max. repetitive peak voltage (V)	100	200	400	600	800	1000	1200	1400	1600
$V_{R(RMS)}$	Max. R.M.S reverse voltage (V)	70	140	280	420	560	700	840	980	1120
V_R	Max. D.C. blocking voltage (V)	100	200	400	600	800	1000	1200	1400	1640
	Recommended R.M.S. working voltage (V)	40	80	160	240	320	400	480	560	640
$I_{R(AV)}$	Max. average reverse leakage current @ V_{RRM} Tc 25ºC (µA)	200	200	200	200	200	200	200	200	200

POWERSEM

SILICON RECTIFIERS

150 Ampere Silicon Power Diodes

DO-8

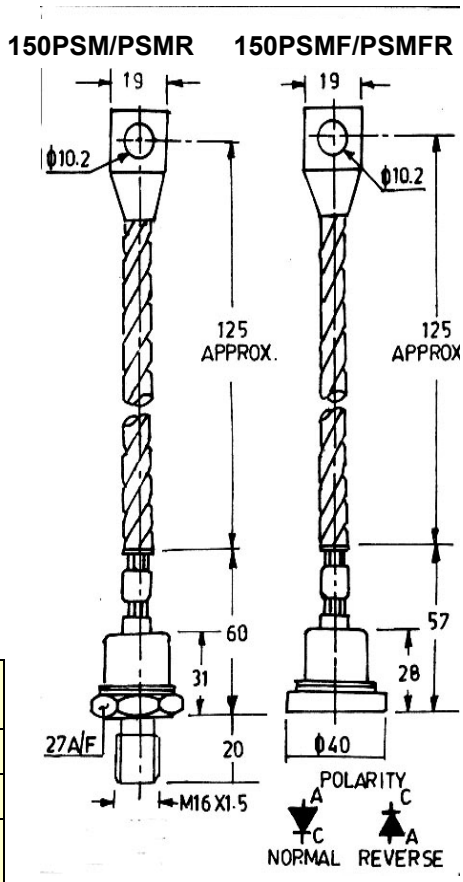

FEATURES

- Diffused Series
- Available In Normal & Reverse Polarity
- Industrial Grade
- Available In Avalanche Characteristic

ELECTRICAL SPECIFICATIONS

$I_{F(AV)}$	Maximum average forward current Tc = 125ºC	150 A
V_{FM}	Maximum peak forward voltage drop @ rated 1F (AV)	1.5 V
I_{FSM}	Maximum peak one cycle (non-rep) surge current 10 msec	3600 A
I_{FRM}	Maximum peak cylce repetitive surge current	750 A
I^2t	Maximum I^2t rating (non-rep.) for 5 to 10 msec.	65,000 A^2sec

THERMAL MECHANICAL SPECIFICATIONS

O_{J-C}	Maximum thermal resistance junction to case	0.25 °C/W
T_J	Operating junction temperature	-65 °C to 150 °C
T_{stg}	Storage temperature	-65 °C to 200 °C
	Mounting torque (Non-lubricated threads)	2.0 M-kg min. 3.0 M-kg max.
W	Approx. weight	150 g

ELECTRICAL RATINGS

TYPE	NUMBER 150PSM/PSMR 150PSMF/PSMFR	10	20	40	60	80	100	120	140	160
V_{RRM}	Max. repetitive peak voltage (V)	100	200	400	600	800	1000	1200	1400	1600
$V_{R(RMS)}$	Max. R.M.S reverse voltage (V)	70	140	280	420	560	700	840	980	1120
V_R	Max. D.C. blocking voltage (V)	100	200	400	600	800	1000	1200	1400	1640
	Recommended R.M.S. working voltage (V)	40	80	160	240	320	400	480	560	640
$I_{R(AV)}$	Max. average reverse leakage current @ V_{RRM} Tc 25ºC (µA)	200	200	200	200	200	200	200	200	200

POWERSEM

SILICON RECTIFIERS

200 Ampere Silicon Power Diodes

FEATURES

- Diffused Series
- Available In Normal & Reverse Polarity
- Industrial Grade
- Also Available With External Cables

DO-8

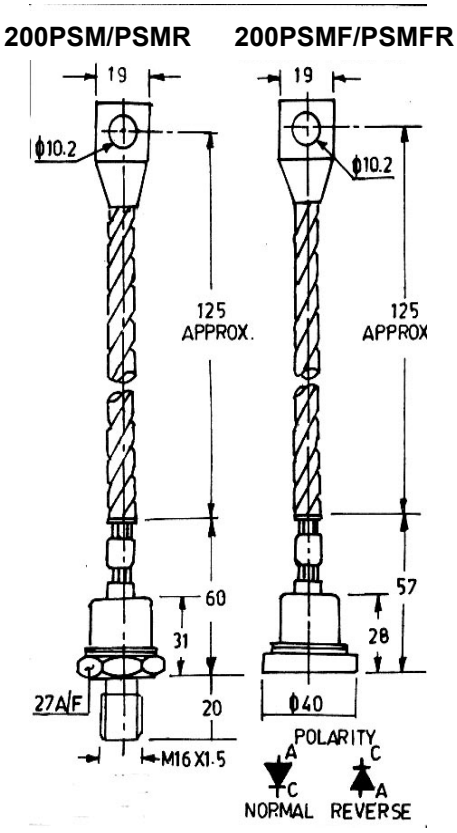

ELECTRICAL SPECIFICATIONS

$I_{F(AV)}$	Maximum average forward current Tc = 130ºC	200 A
V_{FM}	Maximum peak forward voltage drop @ rated 1F(AV)	1.35 V
I_{FSM}	Maximum peak one cycle (non-rep) surge current 10 msec	4300 A
I_{FRM}	Maximum peak cylce repetitive surge current	1100 A
I^2t	Maximum I^2t rating (non-rep.) for 5 to 10 msec.	92,500 A^2 sec

THERMAL MECHANICAL SPECIFICATIONS

O_{J-C}	Maximum thermal resistance junction to case	0.2 °C/W
O_{C-H}	Contact thermal resistance	0.07 °C/W
T_J	Operating junction temperature	-65 °C to 150 °C
T_{stg}	Storage temperature	-65 °C to 200 °C
	Mounting torque (Non-lubricated threads)	0.70 M-kg min. 0.86 M-kg max.
W	Approx. weight	115 g

ELECTRICAL RATINGS

TYPE	NUMBER 200PSM/PSMR 200PSMF/PSMFR	10	20	40	60	80	100
V_{RRM}	Max. repetitive peak voltage (V)	100	200	400	600	800	1000
$V_{R(RMS)}$	Max. R.M.S reverse voltage (V)	70	140	280	420	560	700
V_R	Max. D.C. blocking voltage (V)	100	200	400	600	800	1000
	Recommended R.M.S. working voltage (V)	40	80	160	240	320	400
$I_{R(AV)}$	Max. average reverse leakage current @ V_{RRM} Tc 25°C (µA)	50	50	35	35	35	30

POWERSEM

SILICON RECTIFIERS

250 Ampere Silicon Power Diodes

FEATURES

- Diffused Series
- Available In Normal & Reverse Polarity
- Industrial Grade

DO-9

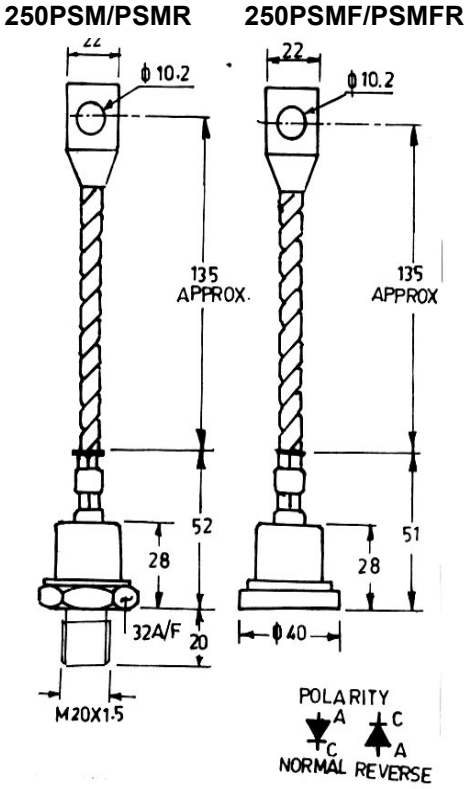

ELECTRICAL SPECIFICATIONS

$I_{F(AV)}$	Maximum average forward current Tc = 130ºC	250 A
V_{FM}	Maximum peak forward voltage drop @ rated 1F(AV)	1.35 V
I_{FSM}	Maximum peak one cycle (non-rep) surge current 10 msec	4500 A
I_{FRM}	Maximum peak cylce repetitive surge current	1200 A
I^2t	Maximum I^2t rating (non-rep.) for 5 to 10 msec.	100,000 A^2sec

THERMAL MECHANICAL SPECIFICATIONS

O_{J-C}	Maximum thermal resistance junction to case	0.18 ºC/W
T_J	Operating junction temperature	-65 ºC to 150 ºC
T_{stg}	Storage temperature	-65 ºC to 200 ºC
	Mounting torque (Non-lubricated threads)	3.2 M-kg min. 3.7 M-kg max.
W	Approx. weight	260 g

ELECTRICAL RATINGS

TYPE	NUMBER 250PSM/PSMR 250PSMF/PSMFR	10	20	40	60	80	100	120	140	160
V_{RRM}	Max. repetitive peak voltage (V)	100	200	400	600	800	1000	1200	1400	1600
$V_{R(RMS)}$	Max. R.M.S reverse voltage (V)	70	140	280	420	560	700	840	980	1120
V_R	Max. D.C. blocking voltage (V)	100	200	400	600	800	1000	1200	1400	1600
	Recommended R.M.S. working voltage (V)	40	80	160	240	320	400	480	560	640
$I_{R(AV)}$	Max. average reverse leakage current @ V_{RRM} Tc 25ºC (mA)	2	2	2	2	2	2	2	2	2

SILICON RECTIFIERS

300 Ampere Silicon Power Diodes

FEATURES

- Diffused Series
- Available In Normal & Reverse Polarity
- Industrial Grade

DO-9

300PSM/PSMR **300PSMF/PSMFR**

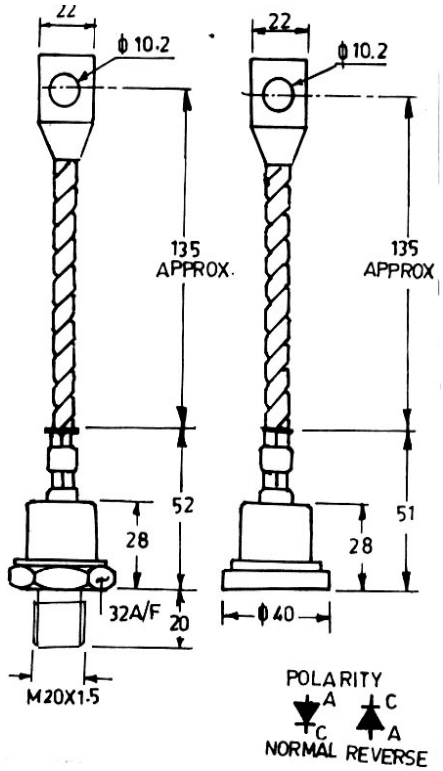

ELECTRICAL SPECIFICATIONS

$I_{F(AV)}$	Maximum average forward current Tc = 125ºC	300 A
V_{FM}	Maximum peak forward voltage drop @ rated 1F(AV)	1.35 V
I_{FSM}	Maximum peak one cycle (non-rep) surge current 10 msec	5000 A
I_{FRM}	Maximum peak cylce repetitive surge current	1400 A
I^2t	Maximum I^2t rating (non-rep.) for 5 to 10 msec.	150,000 A^2sec

THERMAL MECHANICAL SPECIFICATIONS

O_{J-C}	Maximum thermal resistance junction to case	0.18 °C/W
T_J	Operating junction temperature	-65 °C to 150 °C
T_{stg}	Storage temperature	-65 °C to 200 °C
	Mounting torque (Non-lubricated threads)	3.2 M-kg min. 3.75 M-kg max.
W	Approx. weight	260 g

ELECTRICAL RATINGS

TYPE	NUMBER 300PSM/PSMR 300PSMF/PSMFR	10	20	40	60	80	100	120	140	160
V_{RRM}	Max. repetitive peak voltage (V)	100	200	400	600	800	1000	1200	1400	1600
$V_{R(RMS)}$	Max. R.M.S reverse voltage (V)	70	140	280	420	560	700	840	980	1120
V_R	Max. D.C. blocking voltage (V)	100	200	400	600	800	1000	1200	1400	1640
	Recommended R.M.S. working voltage (V)	40	80	160	240	320	400	480	560	640
$I_{R(AV)}$	Max. average reverse leakage current @ V_{RRM} Tc 25ºC (mA)	3	3	3	3	3	3	3	3	3

SILICON RECTIFIERS

320 Ampere Silicon Power Diodes

DO-9

FEATURES

- Diffused Series
- Mainly Available In Reverse Polarity
- Device Conforms To IS 3700 (iii) & IS 440 (iii)
- Device Outline (321 ns / NSR) Conforms to IS 5000 (DO –9)

320PSM/PSMR 320PSMF/PSMFR

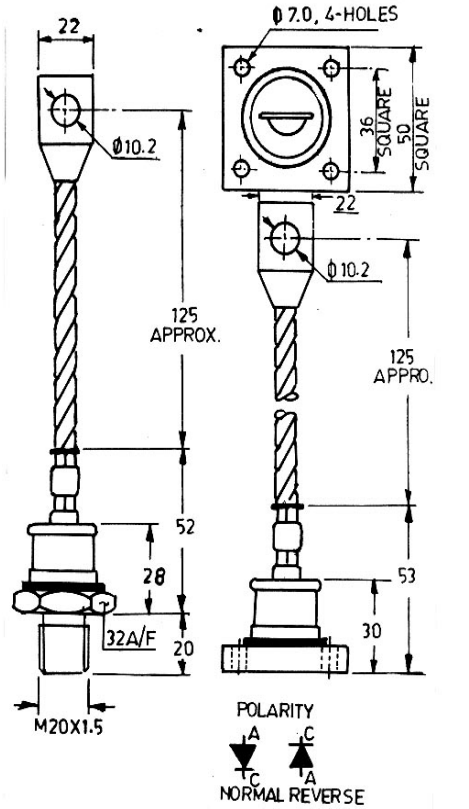

ELECTRICAL SPECIFICATIONS

$I_{F(AV)}$	Maximum average forward current Tc = 125°C	320 A
V_{FM}	Maximum peak forward voltage drop @ rated 1F(AV)	1.65 V
I_{FSM}	Maximum peak one cycle (non-rep) surge current 10 msec	5500 A
I_{FRM}	Maximum peak cylce repetitive surge current	1500 A
I^2t	Maximum I^2t rating (non-rep.) for 5 to 10 msec.	180,000 A^2sec

THERMAL MECHANICAL SPECIFICATIONS

O_{J-C}	Maximum thermal resistance junction to case	0.15 °C/W
T_J	Operating junction temperature	-65 °C to 150 °C
T_{stg}	Storage temperature	-65 °C to 200 °C
	Mounting torque (Non-lubricated threads)	3.2 M-kg min. 3.75 M-kg max.
W	Approx. weight	350 g

ELECTRICAL RATINGS

TYPE	NUMBER 320PSM/PSMR 320PSMF/PSMFR	10	20	40	60	80	100	120	140	160
V_{RSM}	Max. non repetitive peak reverse voltage (V)	200	400	600	800	1000	1200	1400	1600	1800
V_{RRM}	Max. repetitive peak voltage (V)	100	200	400	600	800	1000	1200	1400	1600
$V_{R(RMS)}$	Max. R.M.S reverse voltage (V)	70	140	280	420	560	700	840	980	1120
V_R	Max. D.C. blocking voltage (V)	100	200	400	600	800	1000	1200	1400	1640
	Recommended R.M.S. working voltage (V)	40	80	160	240	320	400	480	560	640
$I_{R(AV)}$	Max. average reverse leakage current @ V_{RRM} Tc 25°C (mA)	5	5	5	5	5	5	5	5	5